KOHLER®

Roughing-In

K-2976-KS
MASTERSHOWER®
3/4″ THERMOSTATIC MIXER

Product Information

Applicable product:	
3/4″ thermostatic mixer - with volume control	K-2976-KS

Optional accessories:	
1/2″ thermostatic mixer- with volume control	K-2974-K
3/4″ thermostatic mixer- with volume control	K-2977-K
Twin ell - for use with diverter bath spouts only	K-9663

Installation Notes

Install this product according to the installation guide.

The K-2976-KS thermostatic mixer valve includes one volume control for shower-only installations. For bath and shower installations, an additional K-2974-K or K-2977-K volume control valve is required for the bath outlet.

An NPT plug must be installed in any unused outlet.

The lower port of the thermostatic mixer is intended for use with a bath spout only. If a bath spout is not used with this product, the lower port must be plugged.

For installations with a diverter spout, a K-9663 twin ell is required between the valve and the spout. A plug must be installed in the lower port of the valve and the supply to the K-9663 twin ell should run from the top port.
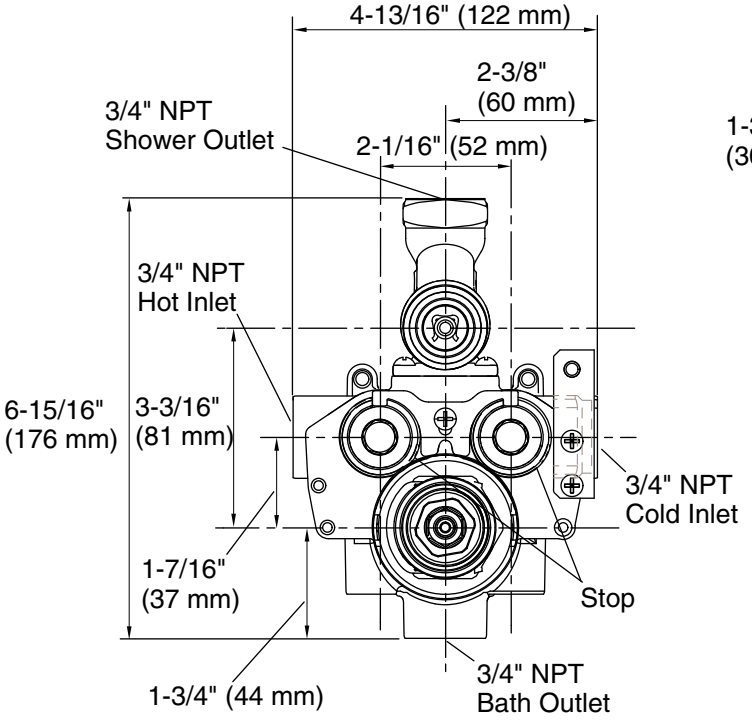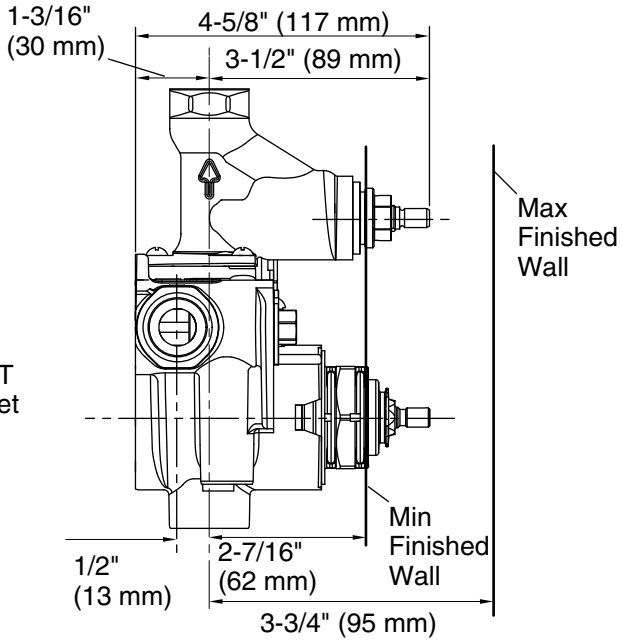
NOTE: Stops are integral to the assembly.